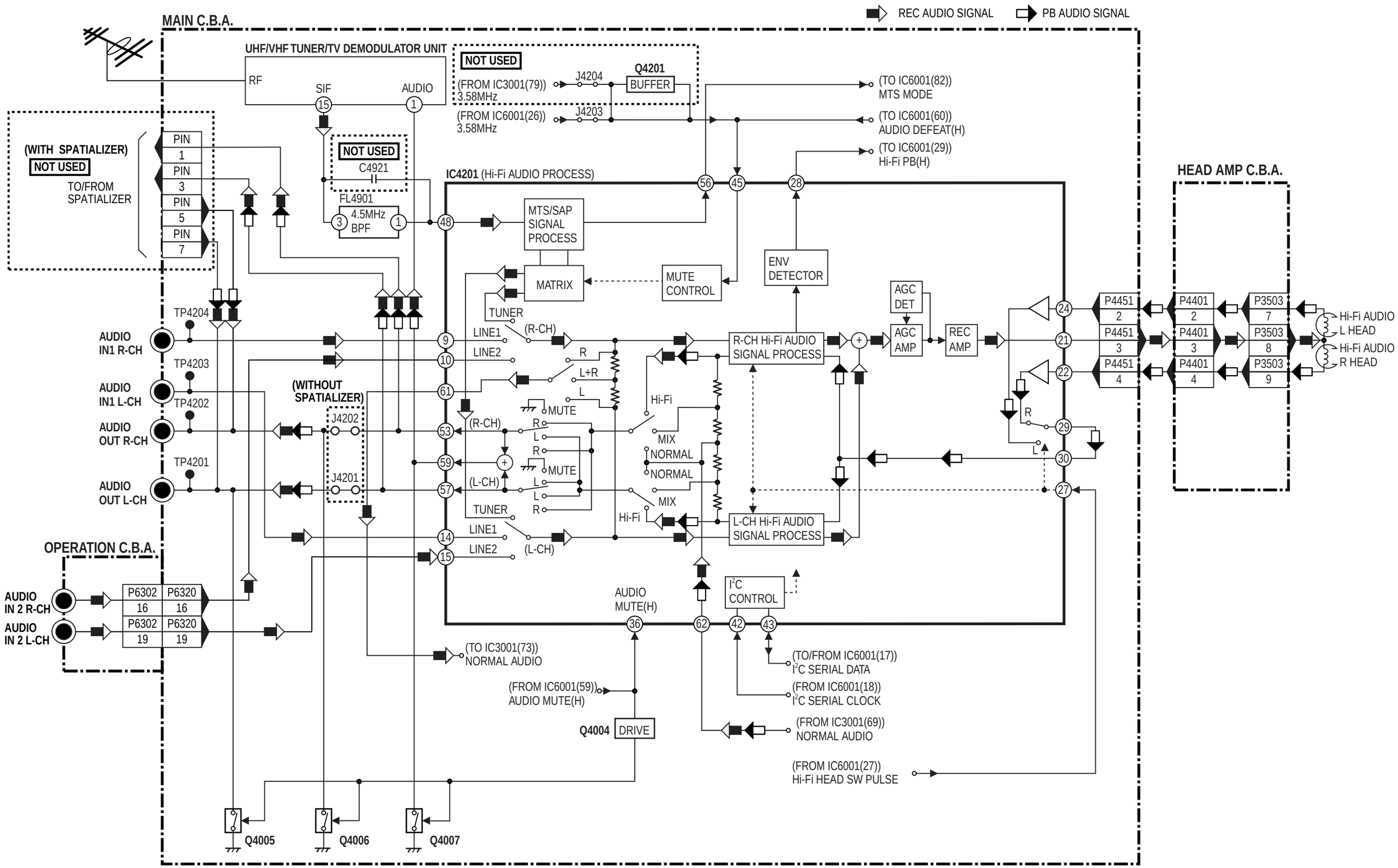
REC AUDIO SIGNAL
PB AUDIO SIGNAL
MAIN C.B.A.
UHF/VHF TUNER/TV DEMODULATOR UNIT
RF
SIF
AUDIO
NOT USED
Q4201
BUFFER
J4204
J4203
(FROM IC3001(79))
3.58MHz
(FROM IC6001(26))
3.58MHz
(TO IC6001(82))
MTS MODE
(TO IC6001(60))
AUDIO DEFEAT(H)
(TO IC6001(29))
Hi-Fi PB(H)
(WITH SPATIALIZER)
NOT USED
TO/FROM
SPATIALIZER
PIN 1
PIN 3
PIN 5
PIN 7
C4921
FL4901
4.5MHz
BPF
IC4201 (Hi-Fi AUDIO PROCESS)
MTS/SAP
SIGNAL
PROCESS
MATRIX
MUTE
CONTROL
ENV
DETECTOR
AGC
DET
AGC
AMP
REC
AMP
R-CH Hi-Fi AUDIO
SIGNAL PROCESS
L-CH Hi-Fi AUDIO
SIGNAL PROCESS
HEAD AMP C.B.A.
P4451
P4401
P3503
Hi-Fi AUDIO
L HEAD
Hi-Fi AUDIO
R HEAD
TP4204
TP4203
TP4202
TP4201
AUDIO
IN1 R-CH
AUDIO
IN1 L-CH
AUDIO
OUT R-CH
AUDIO
OUT L-CH
(WITHOUT
SPATIALIZER)
J4202
J4201
TUNER
LINE1
LINE2
(R-CH)
(L-CH)
MUTE
Hi-Fi
MIX
NORMAL
OPERATION C.B.A.
AUDIO
IN 2 R-CH
AUDIO
IN 2 L-CH
P6302
P6320
AUDIO
MUTE(H)
I²C
CONTROL
(TO IC3001(73))
NORMAL AUDIO
(FROM IC6001(59))
AUDIO MUTE(H)
Q4004
DRIVE
(TO/FROM IC6001(17))
I²C SERIAL DATA
(FROM IC6001(18))
I²C SERIAL CLOCK
(FROM IC3001(69))
NORMAL AUDIO
(FROM IC6001(27))
Hi-Fi HEAD SW PULSE
Q4005
Q4006
Q4007