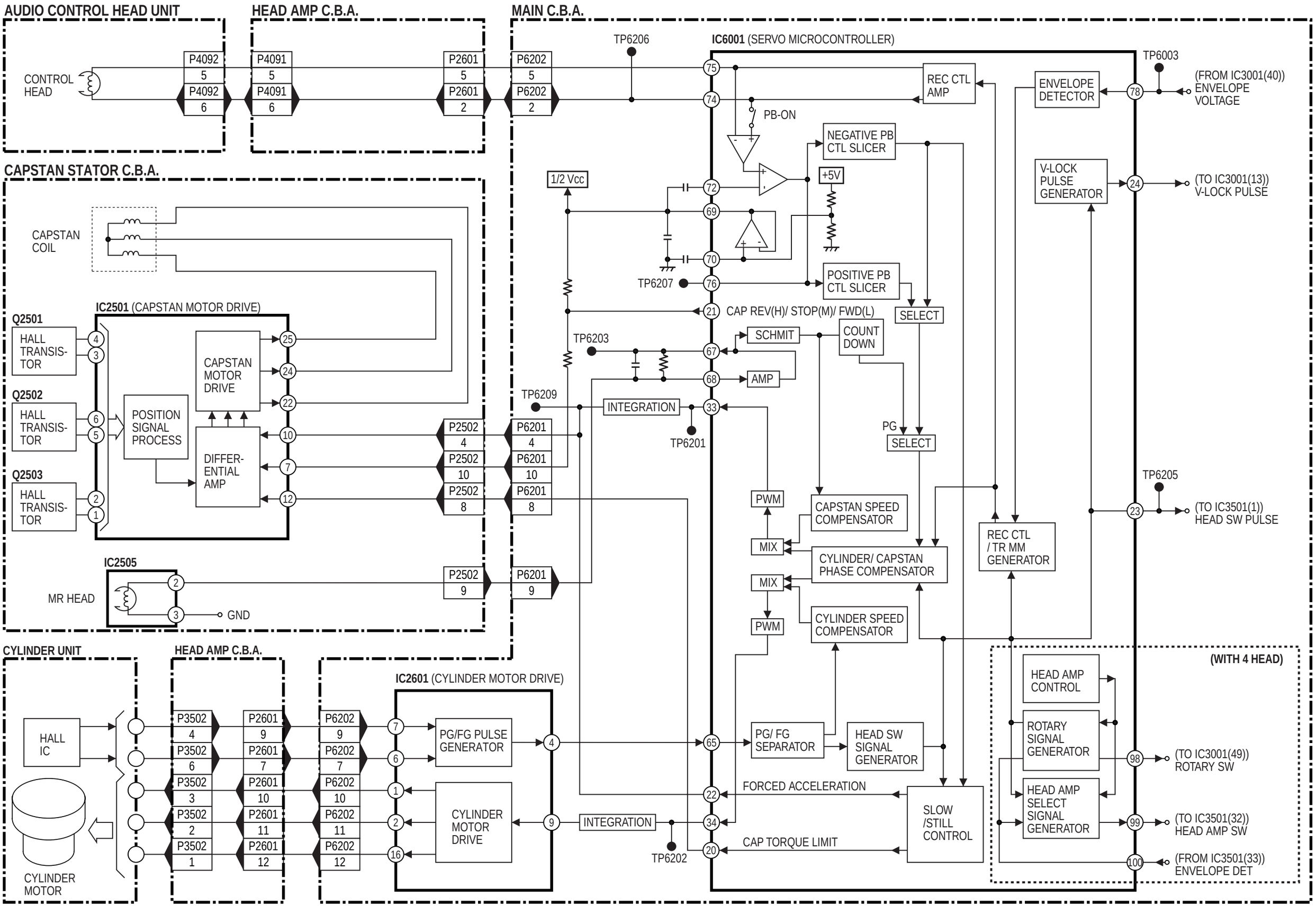
AUDIO CONTROL HEAD UNIT
HEAD AMP C.B.A.
MAIN C.B.A.
CONTROL HEAD
P4092 5
P4092 6
P4091 5
P4091 6
P2601 5
P2601 2
P6202 5
P6202 2
TP6206
IC6001 (SERVO MICROCONTROLLER)
TP6003
(FROM IC3001(40)) ENVELOPE VOLTAGE
ENVELOPE DETECTOR
REC CTL AMP
PB-ON
NEGATIVE PB CTL SLICER
+5V
1/2 Vcc
V-LOCK PULSE GENERATOR
(TO IC3001(13)) V-LOCK PULSE
TP6207
POSITIVE PB CTL SLICER
CAP REV(H)/ STOP(M)/ FWD(L)
SELECT
SCHMIT
COUNT DOWN
TP6203
AMP
TP6209
INTEGRATION
TP6201
PG
SELECT
TP6205
(TO IC3501(1)) HEAD SW PULSE
PWM
CAPSTAN SPEED COMPENSATOR
MIX
CYLINDER/ CAPSTAN PHASE COMPENSATOR
REC CTL / TR MM GENERATOR
MIX
CYLINDER SPEED COMPENSATOR
PWM
CAPSTAN STATOR C.B.A.
CAPSTAN COIL
IC2501 (CAPSTAN MOTOR DRIVE)
Q2501
HALL TRANSIS-TOR
Q2502
HALL TRANSIS-TOR
Q2503
HALL TRANSIS-TOR
POSITION SIGNAL PROCESS
CAPSTAN MOTOR DRIVE
DIFFER-ENTIAL AMP
P2502 4
P2502 10
P2502 8
P6201 4
P6201 10
P6201 8
IC2505
MR HEAD
GND
P2502 9
P6201 9
CYLINDER UNIT
HEAD AMP C.B.A.
IC2601 (CYLINDER MOTOR DRIVE)
HALL IC
CYLINDER MOTOR
P3502 4
P3502 6
P3502 3
P3502 2
P3502 1
P2601 9
P2601 7
P2601 10
P2601 11
P2601 12
P6202 9
P6202 7
P6202 10
P6202 11
P6202 12
PG/FG PULSE GENERATOR
CYLINDER MOTOR DRIVE
INTEGRATION
TP6202
PG/ FG SEPARATOR
HEAD SW SIGNAL GENERATOR
FORCED ACCELERATION
CAP TORQUE LIMIT
SLOW /STILL CONTROL
(WITH 4 HEAD)
HEAD AMP CONTROL
ROTARY SIGNAL GENERATOR
HEAD AMP SELECT SIGNAL GENERATOR
(TO IC3001(49)) ROTARY SW
(TO IC3501(32)) HEAD AMP SW
(FROM IC3501(33)) ENVELOPE DET